REVISIONS			
REV.	DESCRIPTION	ECN	DATE
A.1	1. ADDED DRAIN PLUG NOTE AND DUAL DIMENSIONS		7/18/2011
A.2	1. CHANGED STAINER TO STRAINER IN TITLE BLOCK.		7/23/2013
B.0	1. REMOVED F-1020-FDUC-XXX FROM TITLE BLOCK	ELP-00002	2/6/2016

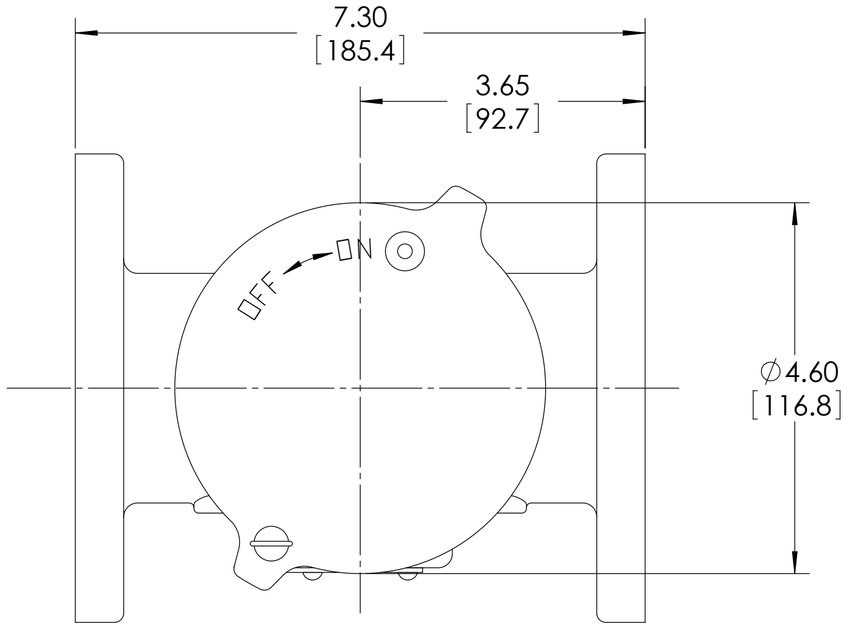

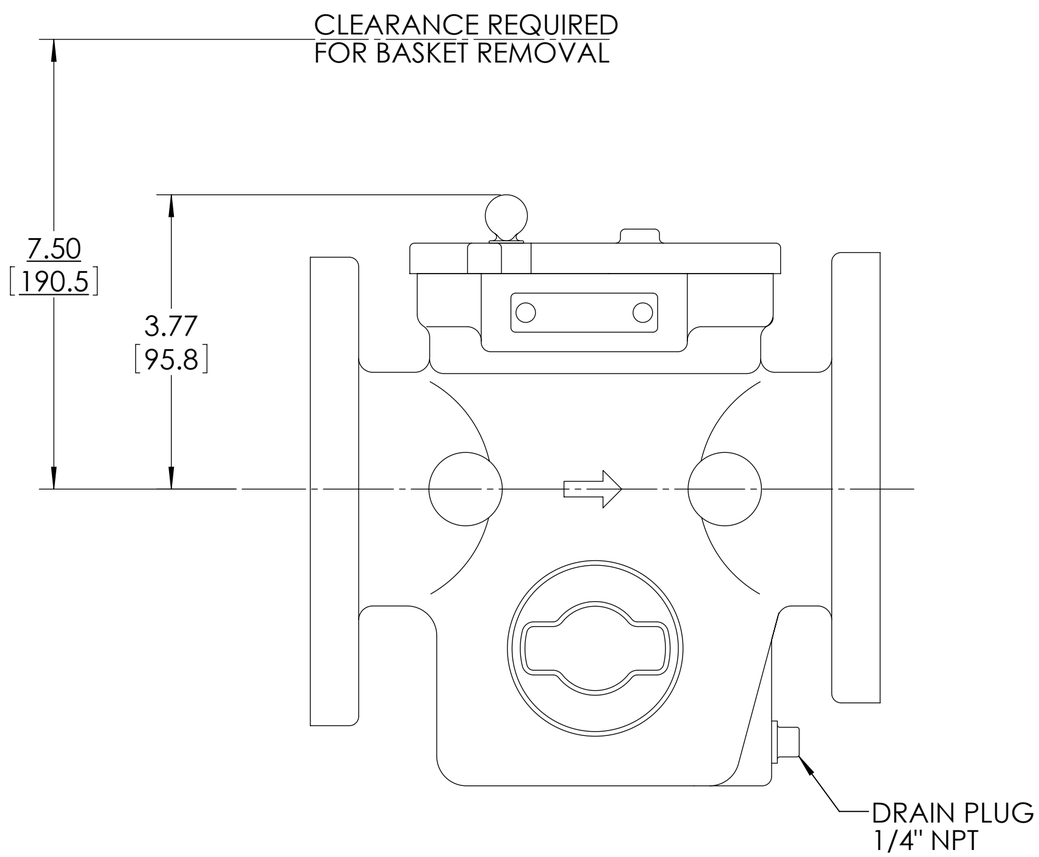

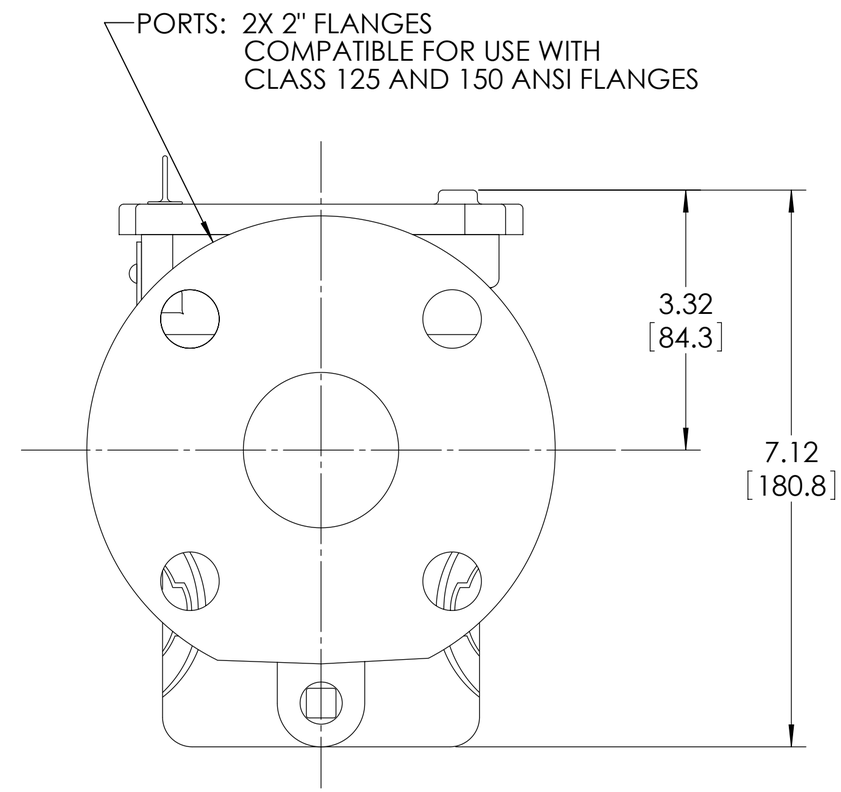

NOTES:
1. REFER TO VIKING CATALOG SECTION 640 FOR -XXX MODEL NUMBER CLARIFICATION.

MESH	10	20	40	60	80	100
OPENING (INCHES)	.075	.034	.015	.0092	.007	.0055
OPENING (MICRONS)	1910	860	380	230	190	140

USE AND RELATED INFORMATION

MATERIAL:

WAS:

------ UNLESS OTHERWISE SPECIFIED ------
DIMENSIONS ARE IN ***INCHES***.
INTERPRET DIM AND TOLERANCES PER VIKING PUMP ES-47
BREAK EDGES .005-.015 RADIUS OR CHAMFER
.XX ±.02 .XXX ±.005 ANGLES ±1°
ALL FINISHED SURFACES 250 (AA .030/CUTOFF)
ACCEPTABILITY OF SCREW THREADS SHALL BE DETERMINED BASED ON SYSTEM 21 ASME B1.3
THIRD ANGLE PROJECTION

STATE	Released	02/08/2016
DRAWN	rmennenga	7/5/2011
CHECKED	JAG	02/08/2016
PROJECT	2D	WEIGHT: LBS
SCALE: 2:3		
CASTING NUMBER		

VIKING PUMP
VIKING PUMP, INC.
A Unit of IDEX Corporation
Cedar Falls, IA 50613
U.S.A.

THIS DRAWING IS THE PROPERTY OF VIKING PUMP, INC. AND IS PROPRIETARY IN GENERAL AND DETAIL. IT SHALL NOT BE COPIED OR ITS CONTENTS REVEALED TO OUTSIDE PARTIES WITHOUT THE WRITTEN CONSENT OF VIKING PUMP, INC.

STRAINER ASSEMBLY, 2" FLANGES - MODELS F-1020-FIRN-XXX, F-1020-FSST-XXX

B.0

SIZE	DWG. NO.	SHEET 1 OF 1	REV
C	F-1020-F		B.0