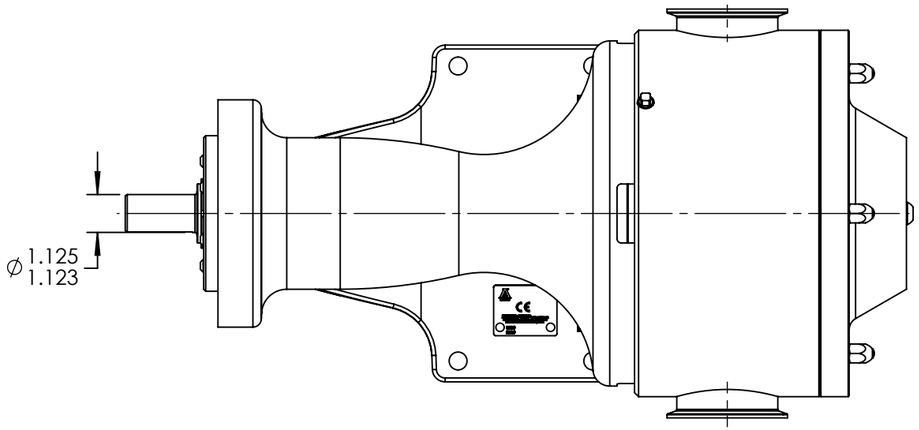

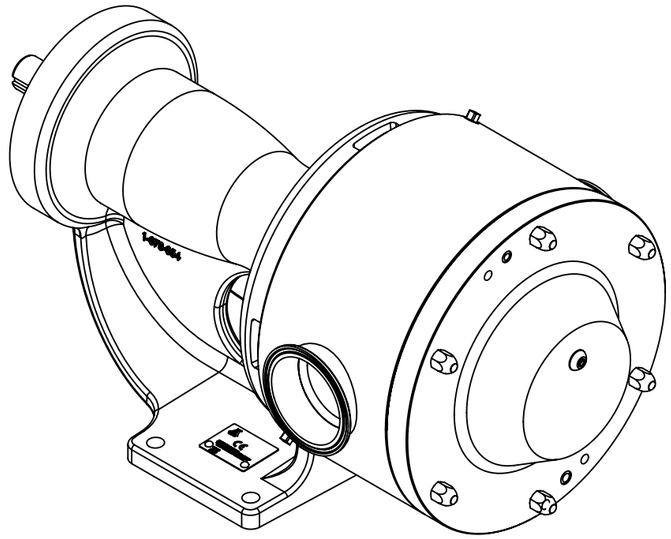

HORIZONTAL PORT ORIENTATION

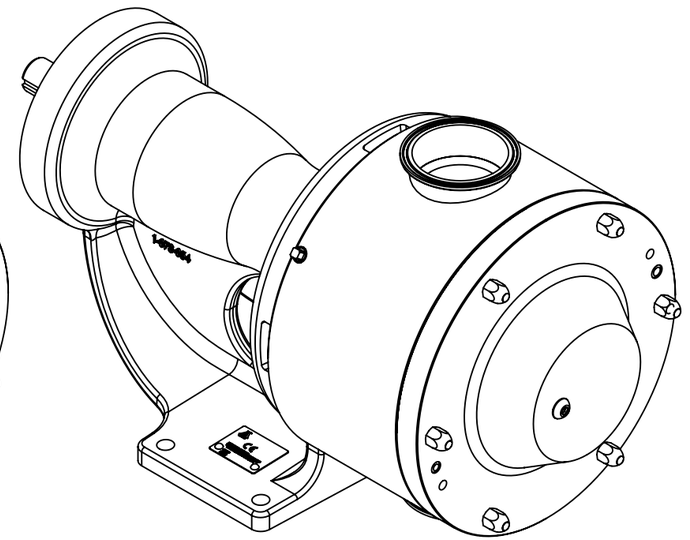

VERTICAL PORT ORIENTATION

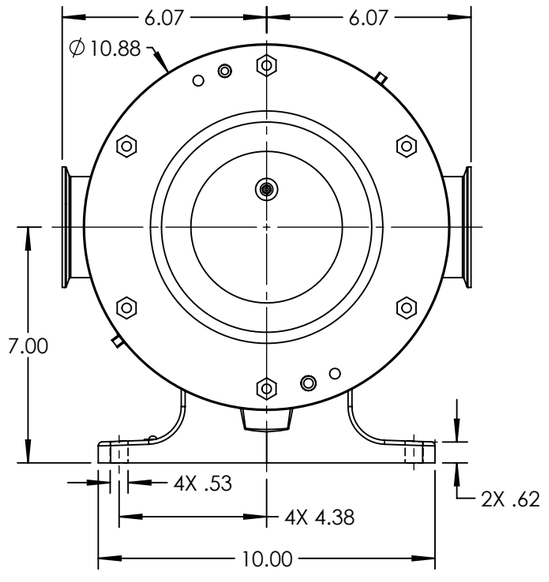

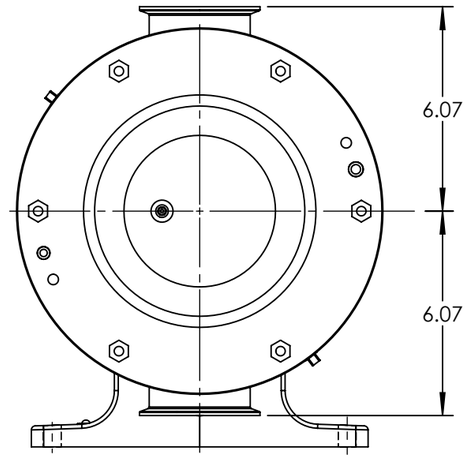

VERTICAL PORT ORIENTATION

STANDARD MODELS: LL4157B, LL157B

NOTES:
1. ALL DIMENSIONS ARE FOR REFERENCE ONLY.

STATE	Released	06/04/2014	DIMENSIONS ARE IN INCHES	VIKING PUMP	VIKING PUMP, INC. A Unit of IDEX Corporation Cedar Falls, IA 50613 U.S.A.	THIS DRAWING IS THE PROPERTY OF VIKING PUMP, INC. AND IS PROPRIETARY IN GENERAL AND DETAIL. IT SHALL NOT BE COPIED OR ITS CONTENTS REVEALED TO OUTSIDE PARTIES WITHOUT THE WRITTEN CONSENT OF VIKING PUMP, INC.	3D	DWG. NO. LV-4239	SHEET 1 OF 1	REV. A.0
DRAWN	tdutcher	6/3/2014	PROJECT: D923							06/04/2014
CHECKED	JAD	06/04/2014	WAS:							

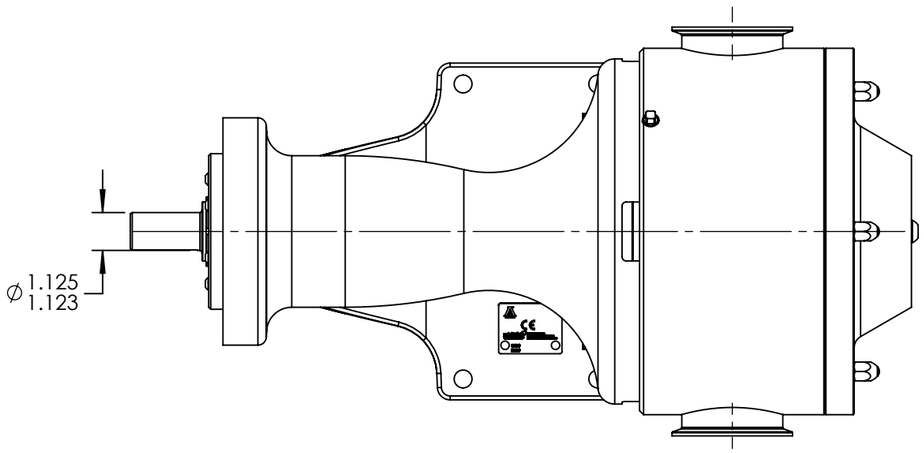

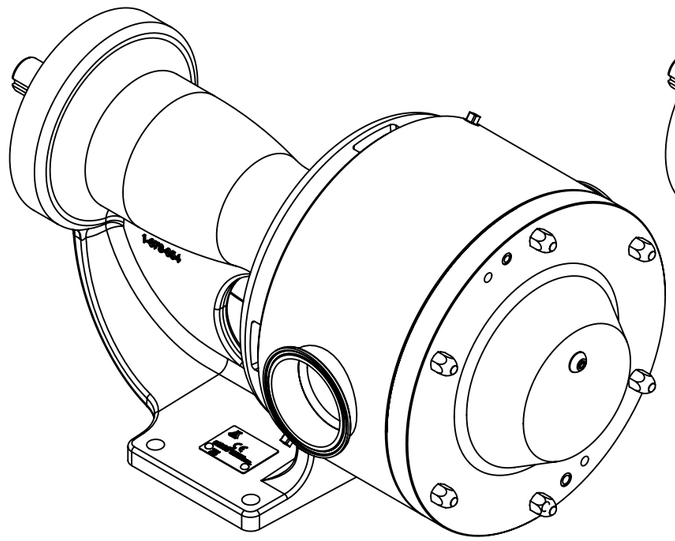

HORIZONTAL PORT ORIENTATION

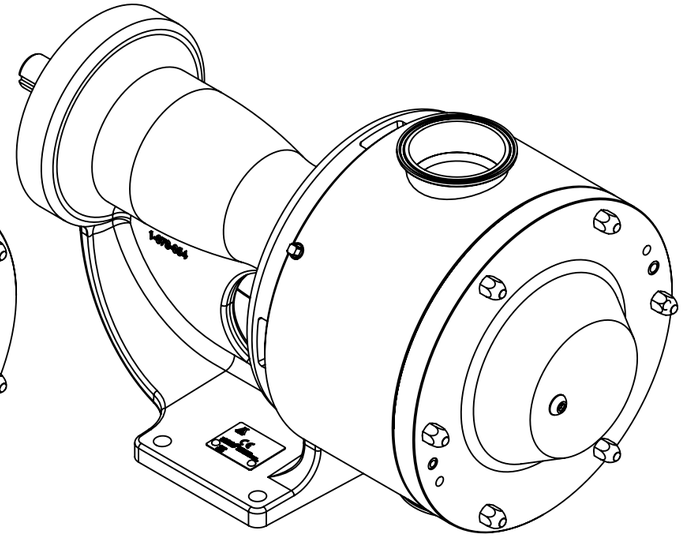

VERTICAL PORT ORIENTATION

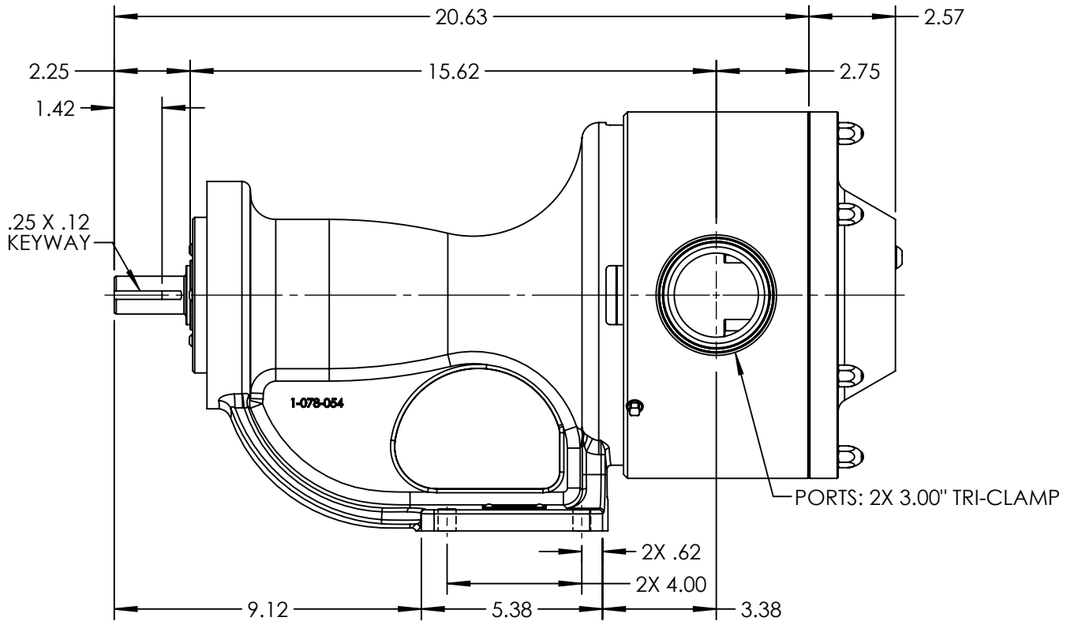

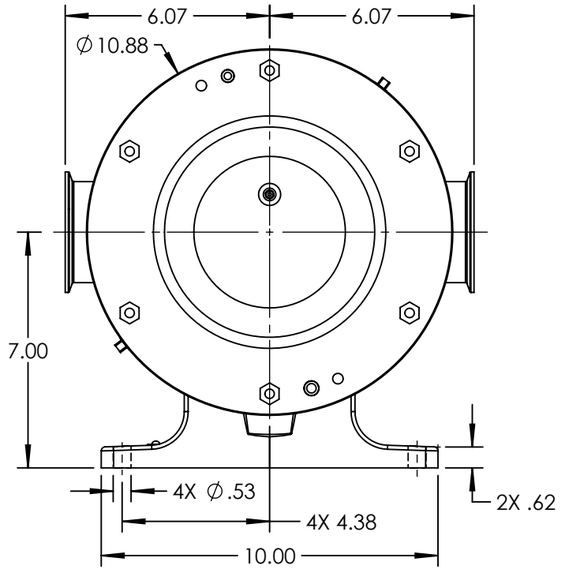

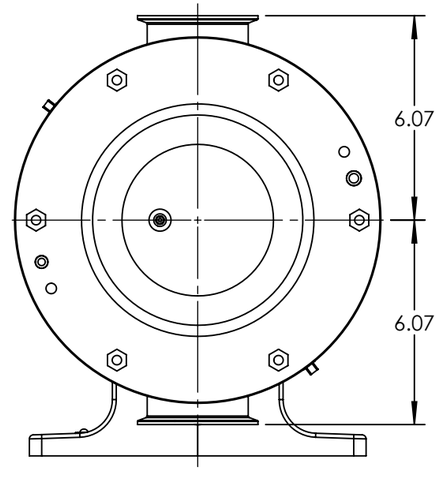

VERTICAL PORT ORIENTATION

STANDARD MODELS: HYG-110

NOTES:
1. ALL DIMENSIONS ARE FOR REFERENCE ONLY.

STATE	Released	06/04/2014	DIMENSIONS ARE IN INCHES	wrightflow TECHNOLOGIES	Wrightflow Technologies, A Unit of IDEX Corporation Cedar Falls, IA 50613 U.S.A. Eastborne, East Sussex, BN23 6PT UK	THIS DRAWING IS THE PROPERTY OF WRIGHTFLOW TECHNOLOGIES AND IS PROPRIETARY IN GENERAL AND DETAIL. IT SHALL NOT BE COPIED OR ITS CONTENTS REVEALED TO OUTSIDE PARTIES WITHOUT THE WRITTEN CONSENT OF WRIGHTFLOW TECHNOLOGIES	3D	DWG. NO. LV-4239	SHEET 1 OF 1	REV. A.0
DRAWN	tdutcher	6/3/2014	PROJECT: D923							06/04/2014
CHECKED	JAD	06/04/2014	WAS:							